WAAS CH 90101 W17B	APP CRS 168°	Rwy ldg 7800 TDZE 499 Apt Elev 501

RNAV (GPS) RWY 17L
LOUISVILLE INTL-STANDIFORD FIELD (SDF)

For inoperative MALSR. increase LPV all Cats. visibility to RVR 5000. For uncompensated Baro-VNAV systems, LNAV/VNAV NA below -16°C (4°F) or above 48°C (118°F). DME/DME RNP-0.3 NA.

MALSR

MISSED APPROACH: Climb to 3000 direct MKATE and via 094° track to IIU VORTAC and hold, continue climb-in-hold to 3000.

ATIS	LOUISVILLE APP CON	LOUISVILLE TOWER	GND CON	CLNC DEL
118.725	132.075 327.0 (EAST) 123.675 327.0 (WEST)	124.2 257.8	121.7 348.6	126.1 275.8

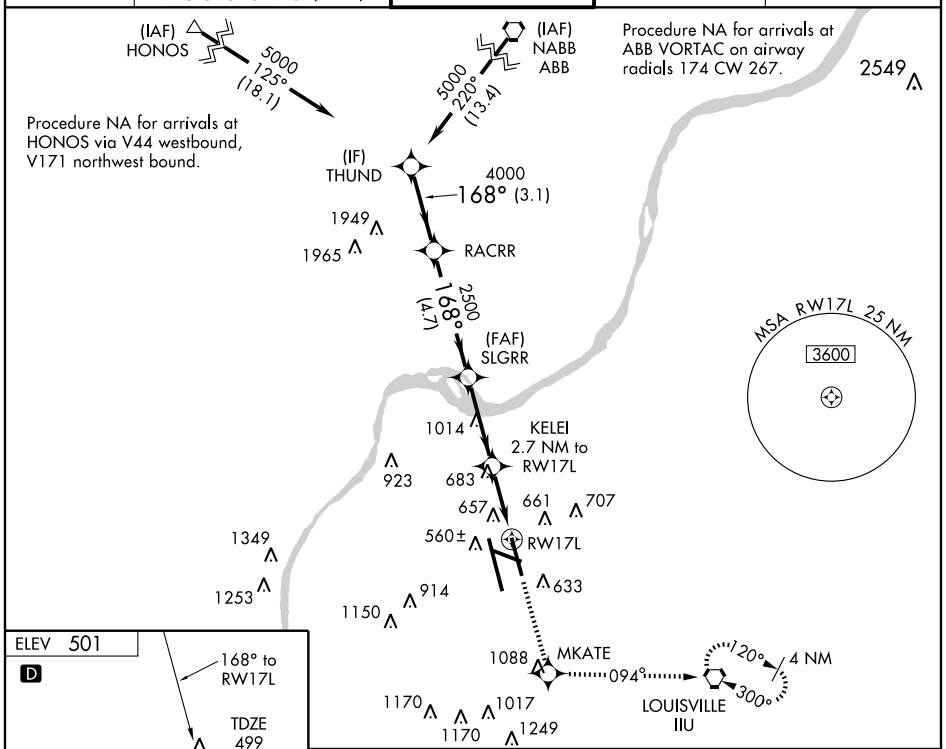

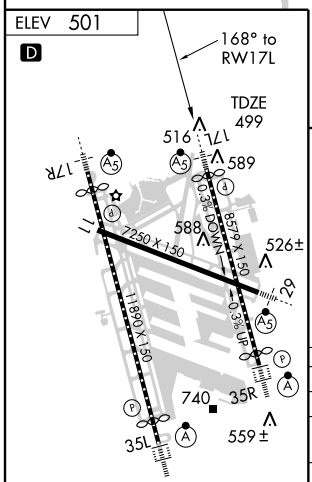

HIRL all Rwys
TDZ/CL Rwys 17L, 35R, 17R, and 35L

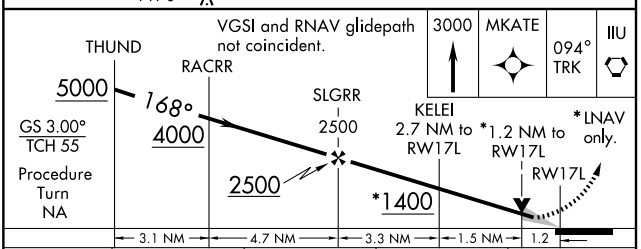

CATEGORY	A	B	C	D
LPV DA	793/24 294 (300-½)			
LNAV/VNAV DA	943/50 444 (500-1)			
LNAV MDA	1000/24 501 (500-½)		1000/50 501 (500-1)	
CIRCLING	1040-1 539 (600-1)	1140-1 639 (700-1)	1140-1¾ 639 (700-1¾)	1140-2 639 (700-2)

SE-1, 19 NOV 2009 to 17 DEC 2009

SE-1, 19 NOV 2009 to 17 DEC 2009